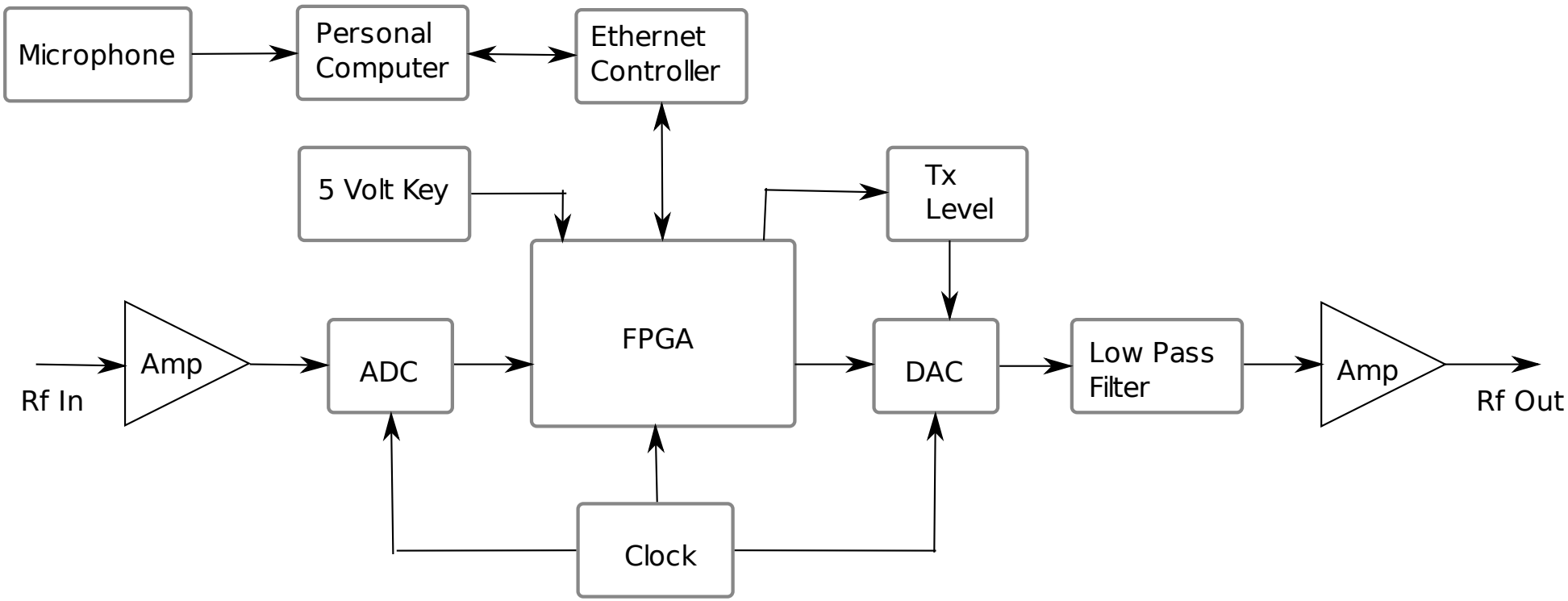
Microphone
Personal Computer
Ethernet Controller
5 Volt Key
Tx Level
FPGA
Rf In
Amp
ADC
DAC
Low Pass Filter
Amp
Rf Out
Clock